FFORM

# Archie Armchair

INDOOR

Oversized and proud of it, Archie is 120cm of soft, inviting armchair with a laid-back silhouette made for sitting, lounging and staying a little longer than planned. Comfort without the fuss, and just the right amount of oversized. You may need to schedule time to get up.

MADE TO ORDER IN YOUR FABRIC

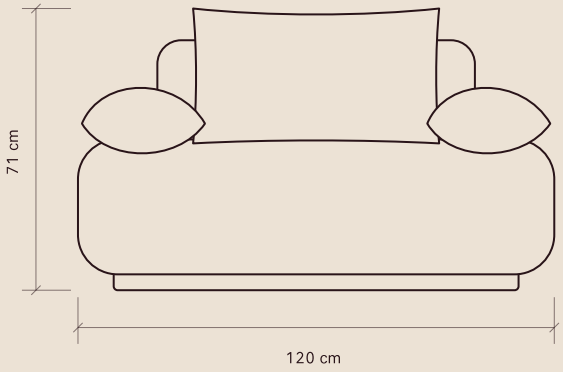


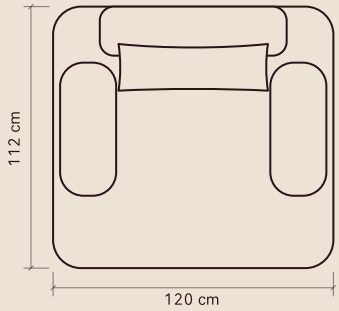


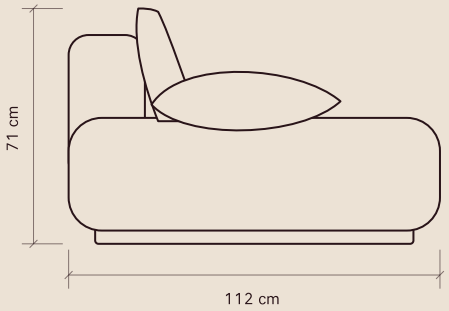


## PRODUCT DETAILS

ASSEMBLY
Assembled

COMMERCIAL
Yes, with selected commercial upholstery

OUTDOOR
No

LEAD TIME
10-12 weeks to warehouse

## DIMENSIONS

WIDTH
120 cm / 47.2 in

DEPTH
112 cm / 44.1 in

HEIGHT
71 cm / 28.0 in

SEAT HEIGHT
42 cm / 16.5 in

## CONSTRUCTION

CONSTRUCTION
Full Upholstery

GLIDES
No

UPHOLSTERY
Indoor upholstery range

COVERS
Not removable. Loose cushion covers removable

FILL
Foam, medium density