FFORM

Bow Sofa

Bow bends the rules a little. Raise or lower the armrests, fold the backrests back and forth, and sit upright, recline or land somewhere comfortably in between. Join the modules into a sweeping horseshoe of epic proportions. Dinner parties may never end.

MADE TO ORDER IN YOUR FABRIC

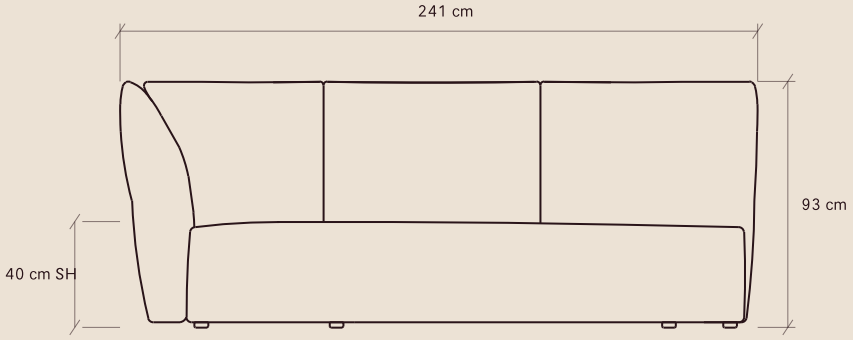

LEFT END

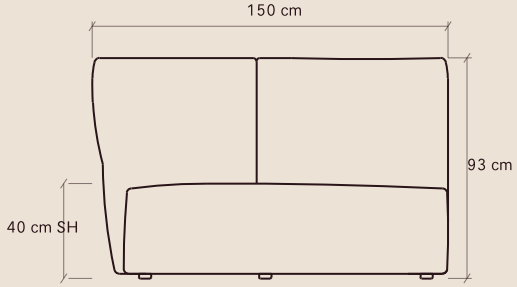

ANGLED CENTRE

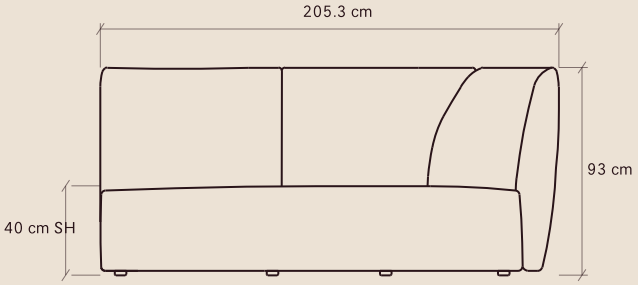

RIGHT END

PRODUCT DETAILS

ASSEMBLY
Assembled

COMMERCIAL
Yes, with selected commercial upholstery

OUTDOOR
No

LEAD TIME
10-12 weeks to warehouse

DIMENSIONS

LEFT END W X D X H
241 x 158 x 93 cm

ANGLED CENTRE W X D X H
150 x 129.5 x 93 cm

RIGHT END W X D X H
205.3 x 156.7 x 93 cm

SEAT HEIGHT
40 cm / 15.7 in

CONSTRUCTION

FRAME
Solid Timber Legs

FINISH
Natural oil or stain

GLIDES
No

UPHOLSTERY
Indoor upholstery range

COVERS
Not removable

FILL
Foam, medium density

FFORM

Bow Sofa modules

ALL DIMENSIONS IN CM

MODULE 1

Left end

241 x 158 cm, 93 cm high
Seat height 40 cm

Angled end with chaise seat.

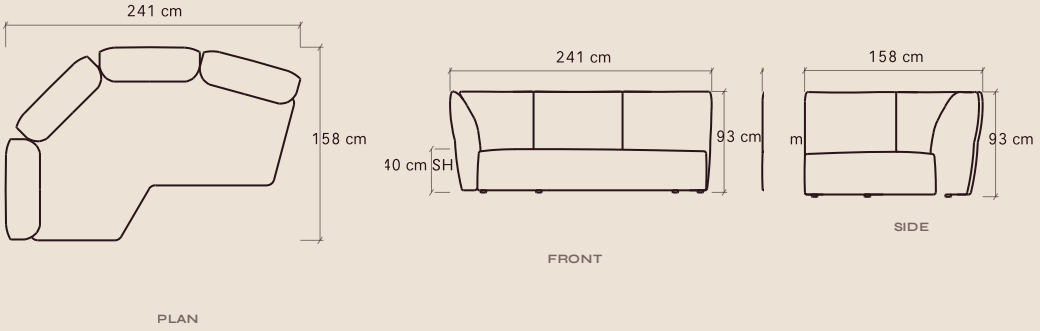

MODULE 2

Angled centre

150 x 129.5 cm, 93 cm high
Seat height 40 cm

Angled centre section.

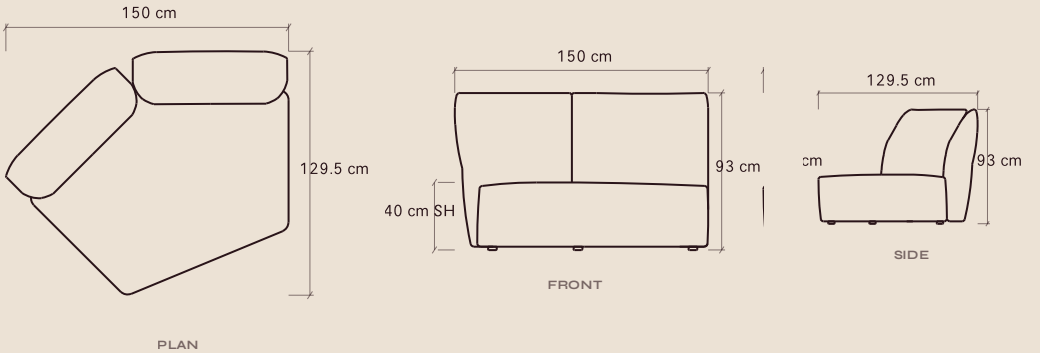

MODULE 3

Right end

205.3 x 156.7 cm, 93 cm high
Seat height 40 cm

Angled end section.

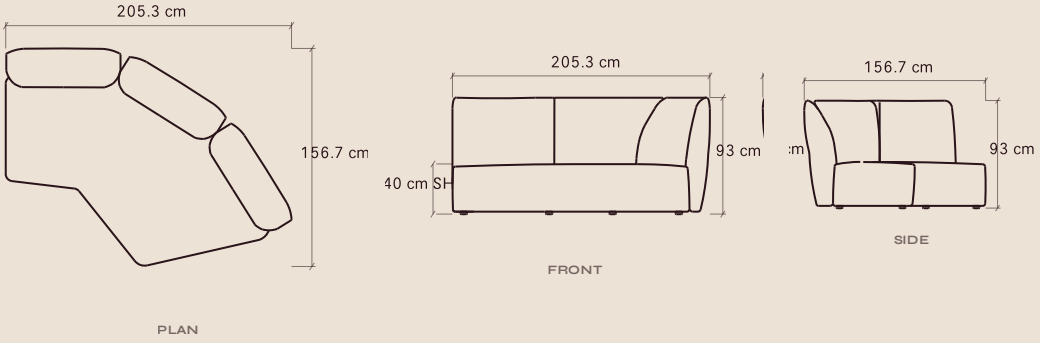

Module elevations are indicative. Confirm construction details before manufacture.