FFORM

Carrie Chair

INDOOR

Soft where it counts and structured where it matters, the Carrie Chair wraps a generous cushioned shell into a crisp frame. A collaboration with renowned hotel designer Carrie Williams, its continuous curve cradles the body without losing its architectural edge. Dinner guests may refuse to leave.

MADE TO ORDER IN YOUR FABRIC

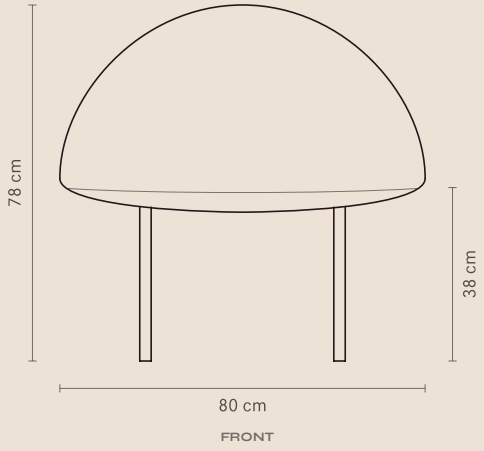

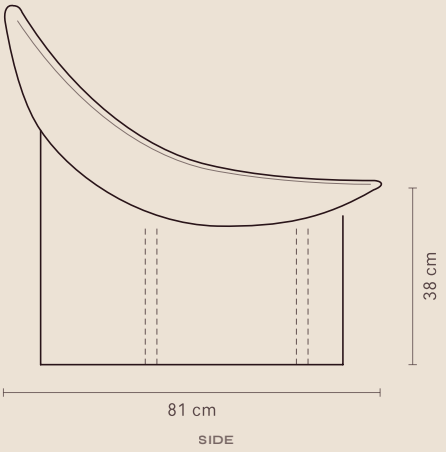

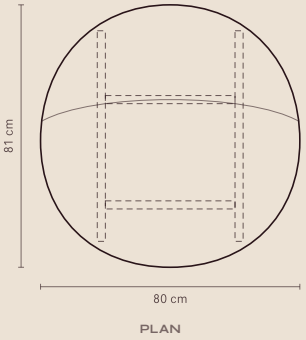

PRODUCT DETAILS

ASSEMBLY
Assembled

COMMERCIAL
Yes, with selected commercial upholstery

OUTDOOR
No

LEAD TIME
10-12 weeks to warehouse

DIMENSIONS

WIDTH
80 cm / 31.5 in

DEPTH
81 cm / 31.9 in

HEIGHT
78 cm / 30.7 in

SEAT HEIGHT
38 cm / 15.0 in

CONSTRUCTION

FRAME
Solid Timber base, 25 mm

FINISH
Natural oil or stain

GLIDES
Yes

UPHOLSTERY
Indoor upholstery range

COVERS
Not removable

FILL
Foam firm density