FFORM

Carrie Chair

OUTDOOR

Al fresco, but make it tailored. Designed with renowned hotel designer Carrie Williams, this Carrie Chair sets a cradling cushioned shell into a crisp, sturdy frame, its continuous curve as comfortable as it looks. At home on a terrace, a hotel deck or the end of a long table.

MADE TO ORDER

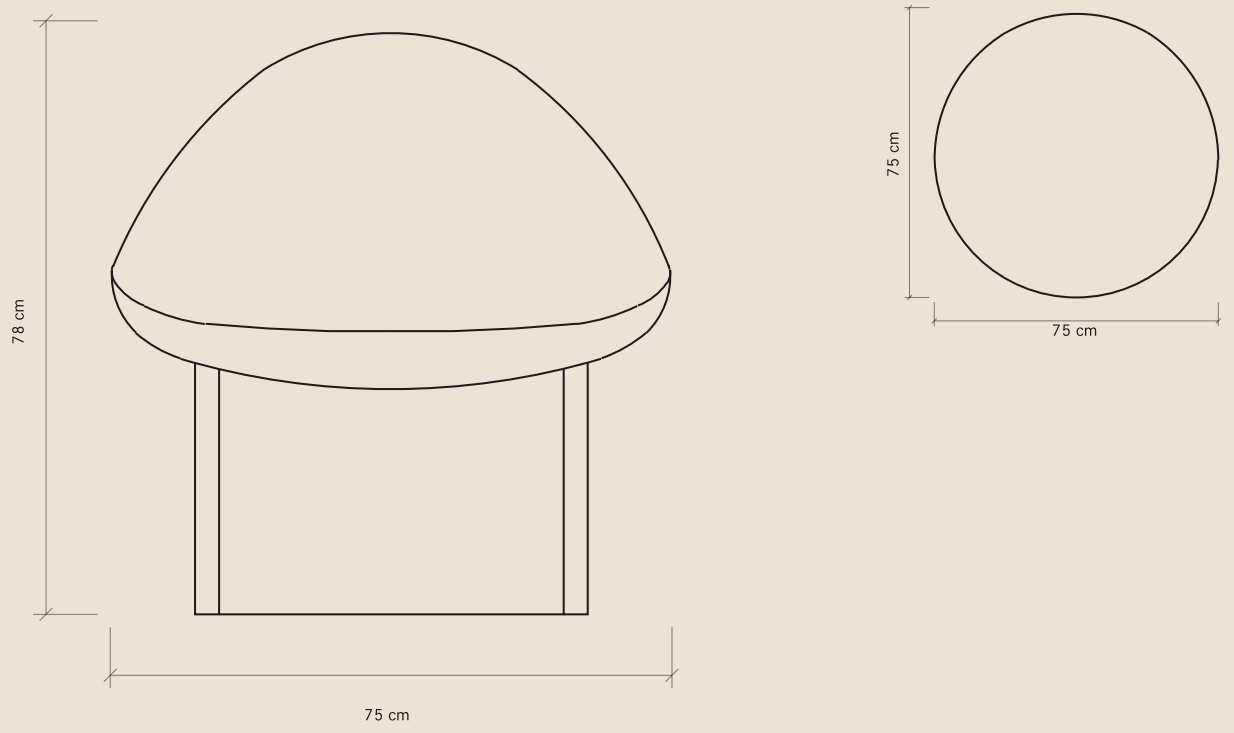

PRODUCT DETAILS

ASSEMBLY
Assembled

COMMERCIAL
Yes, with selected commercial upholstery

OUTDOOR
Yes, undercover

LEAD TIME
10-12 weeks to warehouse

DIMENSIONS

DIAMETER
75 cm / 29.5 in

HEIGHT
78 cm / 30.7 in

SEAT HEIGHT
45 cm / 17.7 in

CONSTRUCTION

FRAME
Solid Timber Legs and Frame

FINISH
Natural oil or stain

GLIDES
Yes

UUPHOLSTERY
Outdoor Upholstery Range

COVERS
Not removable

FILL
Outdoor quick dry foam