FFORM

SS Lounge Chair

Made to settle into, the SS Lounge Chair is compact and curved, wrapping gently around you while a generous upholstered base keeps it grounded. It sits on a swivel base, so it turns easily towards the conversation or the view. Sculptural enough to hold a room, comfortable enough to live in.

MADE TO ORDER IN YOUR FABRIC

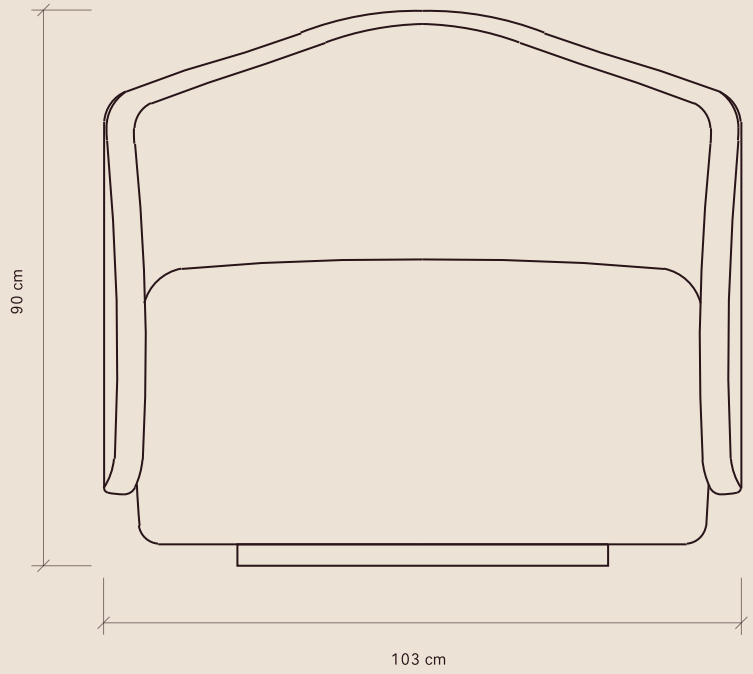

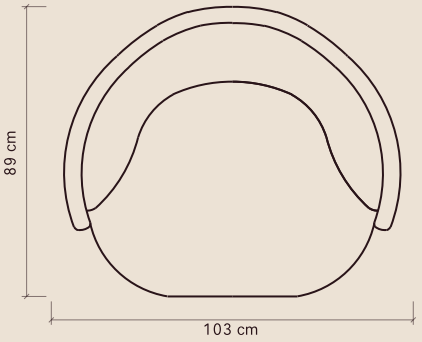

PRODUCT DETAILS

ASSEMBLY
Assembled

COMMERCIAL
Yes, with selected commercial upholstery

OUTDOOR
No

LEAD TIME
10-12 weeks to warehouse

DIMENSIONS

WIDTH
103 cm / 40.6 in

DEPTH
89 cm / 35.0 in

HEIGHT
90 cm / 35.4 in

SEAT HEIGHT
50 cm / 19.7 in

CONSTRUCTION

FRAME
Treated hardwood and plywood

BASE
Swivel

GLIDES
Yes

UPHOLSTERY
Indoor upholstery range

COVERS
Not removable

FILL
Foam, medium density